DATASHEET BMP TS

A. DIMENSIONS

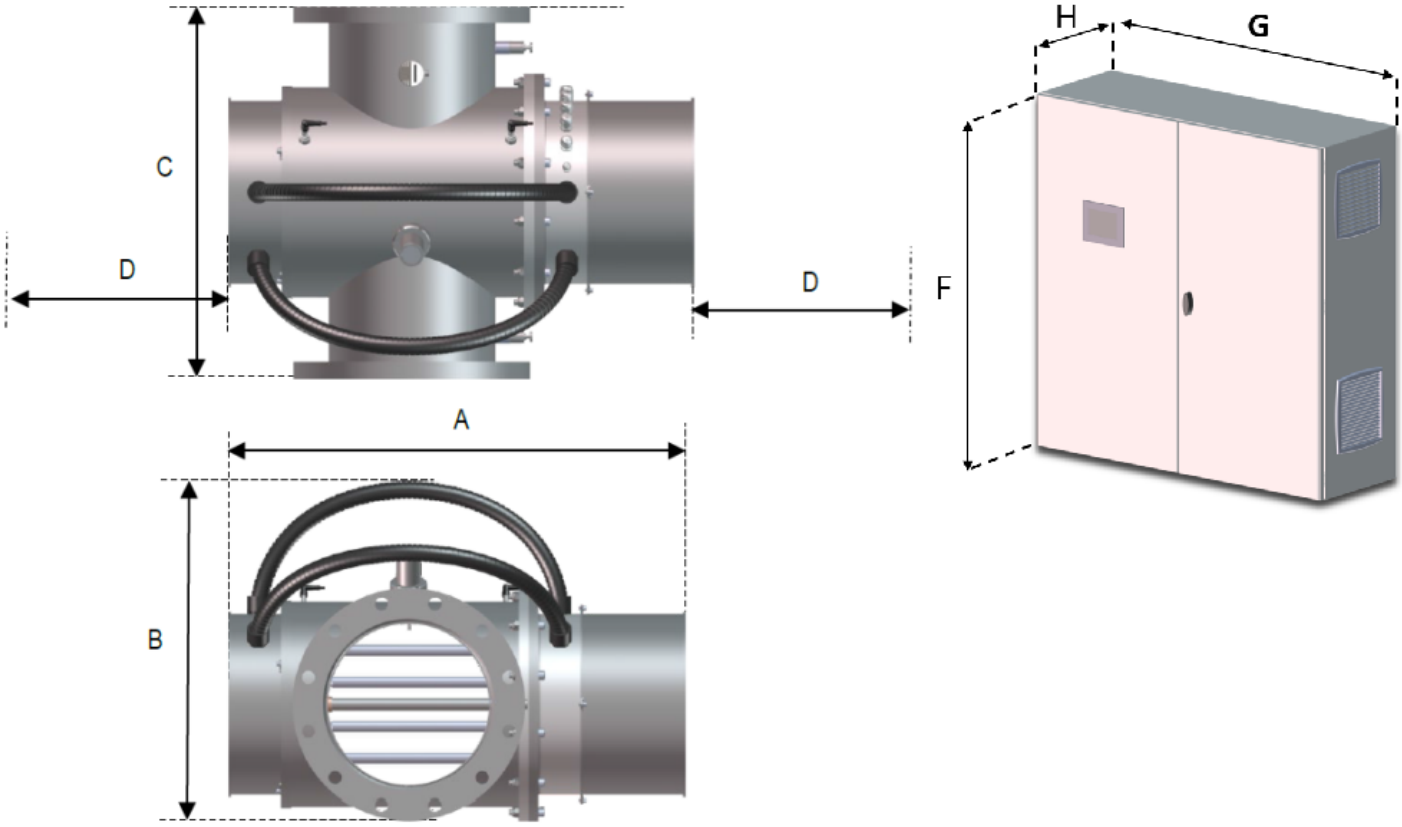

Image non-contractual.

Designation	Unit	BMP 560
REACTOR		
A) Full length	mm	991
B) Height	mm	774
C) Fixation spacing	mm	850
D) Service spacing	mm	600
Type of connection	-	Flanges
Connection	-	DN450
Position I/O	-	In line
CABINET		
F) Height	mm	1200
G) Width	mm	1200
H) Depth	mm	400

B. GENERAL DESCRIPTION

Designation	Unit	BMP 560
Certifications / Approvals	-	CE, Önorm, ACS
VERSION		
Without cleaning	-	Yes
With automatic cleaning	-	Yes
ENVIRONMENT OF USE		
Place	-	Local free from frost and rain
Minimum ambient Temperature	°C	+5
Maximum ambient Temperature	°C	+40
Maximum relative humidity	-	80% non condensating
WATER QUALITY		
Water Temperature	°C	+0 to +40
Standard Transmittance on 10mm	-	98%
REACTOR		
Material	-	SS316L
Finishing	-	Sand Blasted
Weight	kg	300
Pickling / passivation	-	Included
Drain in high point	-	Yes
Drain in low point	-	Yes
Flowmeter	-	Yes
Max Service Pressure	bar	10
Standard mounting	-	Horizontal Vertical
CABINET		
Material	-	Painted steel
Cabinet / reactor cable length	m	10
Weight	kg	201
Cabinet ventilating	-	Yes
Ventilation filter	-	grid
Power supply	V	380-415
Frequency	Hz	50/60
Cable Type/Gauge	mm²	5G10
Section of the earth cable	mm²	10
Amperage	A	54.83-50.21
Power	W	29474
Differential protection	-	30 mA Type G
Magnetothermic protection	-	63A 4P
Trigger curve	-	Curve D
Ingress Protection	-	IP55
UV LAMPS		
Number of lamps	-	5
Power unitary	W	5600
Type of lamp	-	Medium pressure
UV Power unitary	W	615
Total UV Power	W	3075
Lifetime	h	9 000 to 12 000

C. MONITORING

Designation	
Interface	Touch screen 5.7inches
Screens	Process, Menu, Settings, System, Ballasts / Lamps, Alarms, Event, Curves
Data	Radiation UVC in W / m², Cabinet temperature / Reactor in ° C, Hour meters lamps and system, System start counter, Power regulation level.
Stainless steel UV sensor	Reads the UVC radiation of the device.
Temperature sensor (Option)	Reads the reactor temperature from 0 to 73 ° C.
Combined Chlorine Input 4-20mA	Retrieves the value of the combined chlorine level (Customer analyzer).
4-20mA Output UV irradiance	4-20mA output signal copying the UV sensor, 0 W / m² = 4mA, Sensor Caliber = 20mA
4-20 mA temperature sensor output (Option)	4-20mA output signal copied from the reactor temperature sensor, 0 ° C = 4mA, 73 ° C = 20mA
Flow detector	Allows detection of the presence of flow in the device and allows the start of the lamps.
Output General Alarm contact	Alarm contact grouping all UV alarms, cabinet temperature, reactor temperature, flow controller or flowmeter. The contact opens in the event of an alarm.
Output Alarm contact 1	Configurable alarm contact, choice between UV alarm, cabinet temperature, reactor temperature, flow controller or flowmeter. The contact opens in the event of an alarm.
Output Alarm contact 2	same as Alarm contact 1
Output Warning contact	Warning contact grouping the UV warning, cabinet temperature and reactor, flow controller and flowmeter. The contact opens in the event of an alarm.
Data outputs contact	12-24Vdc, 90-250Vac, 3A
Power dimming	The device adapts-reduces the electric power of the lamps to obtain the necessary dose depending on water quality
Remote (ON/OFF lamps)	Allows remote control of the device with a potential free switch.
Communication	ModbusTCP communication protocol, allows you to read the data in real time and control the device remotely.
Alarms, events, data storage.	Alarms, events and sensor data are stored on a USB stick.
DIMMING MODES	
Manual dimming	Adapts the power of lamps from 50 to 100%
Auto/UV Dimming	Adapts the power of the lamps according to the UV radiation read by the sensor.

D. POSSIBLE OPTIONS

Designation	BMP 560
Temperature sensor + 4-20mA Output	OPT003716
Stainlees steel air vent	OPT004710
cable >= 10m and =<23m	OPT009347/OPT009904
PN16	OPT016302

E. CLEANING SYSTEM OF QUARTZ SLEEVES

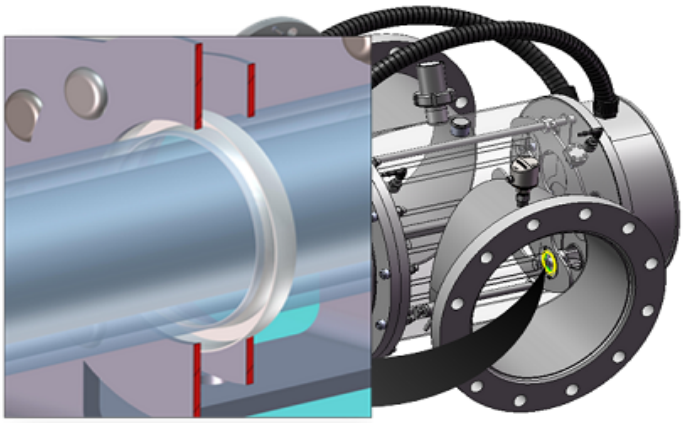

CLEANING WITH SCRAPER

Auto with motor:

The automatic cleaning system is designed to reduce the formation of organic and inorganic deposits on quartz sleeves.

It uses reinforced Teflon rings mounted on a stainless steel trolley to scrape the surface of the quartz sleeves of each lamp.

The automatic system ensures the cleaning at predetermined and configurable intervals by means of a trapezoidal screw driven by an electric motor by performing a round trip all along the quartz sleeves.

Unlike chemical cleaning, scraping operations that do not require lamp shutdown and hydraulic isolation of the UV reactor are carried out during operation of the UV device.

Benefits:

The cleaning system minimizes the fouling of the quartz sleeves.

Provides a constant UV dose.

Operates in line while lamps perform disinfection, thus reducing downtime.

Can be set to clean lamp sleeves at adjustable intervals of one hour (Auto only).

Manual cleanings with chemical cleaning agents previously frequent become exceptional.