DATASHEET DW NA

A. DIMENSIONS

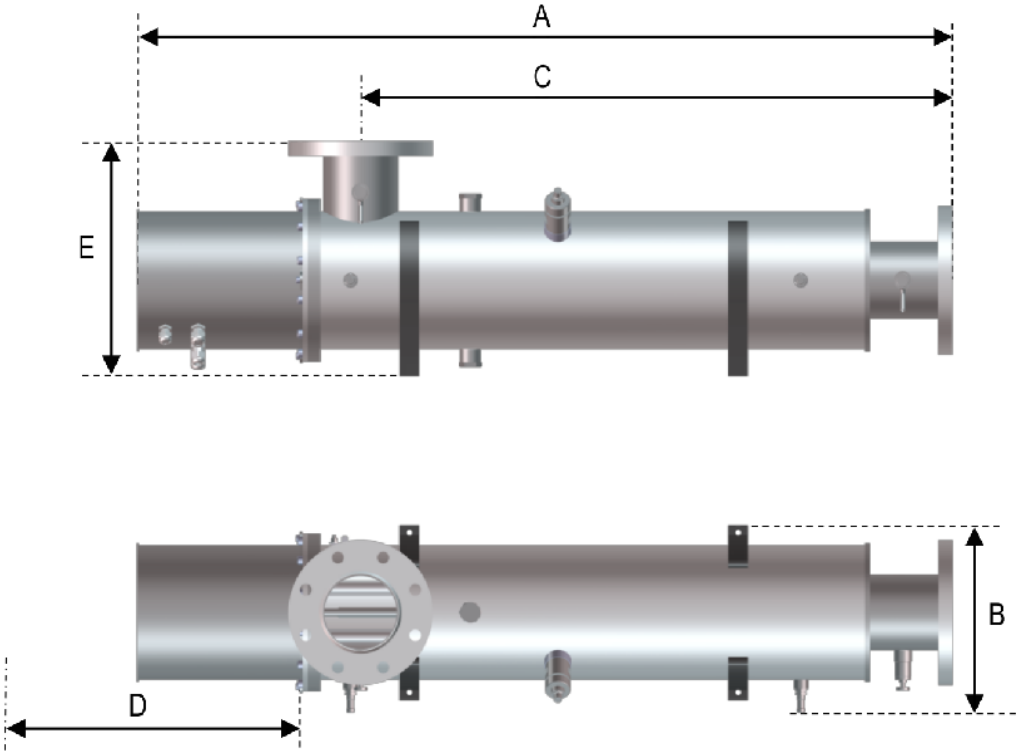

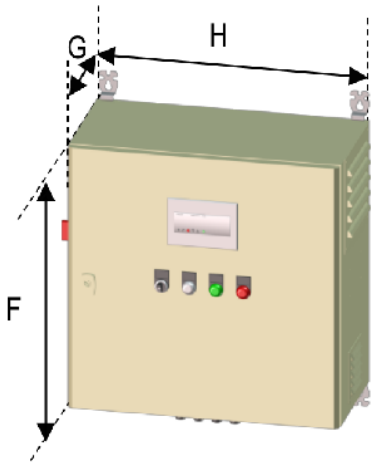

Image non-contractual.

Designation	Unit	DW1150 120W	DW2150 120W	DW4205 120W	DW3323 400W	DW5355 500W	DW10508 500W
REACTOR							
A) Full length	mm	1210	1242	1245	2298	2287	2355
B) Width	mm	250	314	301	428	438	610
C) Fixation spacing	mm	870	901	901	1555	1555	1550
D) Service spacing	mm	850	850	850	1600	1600	1600
E) Depth	mm	272	306	347	567	605	835
Type of connection	-	Male Thread	Flanges	Flanges	Flanges	Flanges	Flanges
Connection	-	2"1/2	DN100	DN100	DN200	DN250	DN350
Position I/O	-	L	L	L	L	L	L
CABINET							
F) Height	mm	500	500	500	600	800	1200
G) Width	mm	400	400	400	600	600	800
H) Depth	mm	200	200	200	400	400	400

B. GENERAL DESCRIPTION

Designation	Unit	DW1150 120W	DW2150 120W	DW4205 120W	DW3323 400W	DW5355 500W	DW10508 500W
Certifications / Approvals	-	CE, Önorm, ACS	CE, Önorm, ACS	CE, Önorm, ACS	CE, Önorm, ACS	CE, Önorm, ACS	CE, Önorm, ACS
ENVIRONMENT OF USE							
Minimum ambient Temperature	°C	+5	+5	+5	+5	+5	+5
Maximum ambient Temperature	°C	+40	+40	+40	+40	+40	+40
Maximum relative humidity	-	80% non condensating	80% non condensating	80% non condensating	80% non condensating	80% non condensating	80% non condensating
WATER QUALITY							
Water Temperature	°C	+10 to +35	+10 to +35	+10 to +35	+10 to +35	+10 to +35	+10 to +35
Transmittance range	%	>85%	> 80%	> 80%	>85%	>85%	>85%
REACTOR							
Material	-	SS316L	SS316L	SS316L	SS316L	SS316L	SS316L
Finishing	-	Sand Blasted	Sand Blasted	Sand Blasted	Sand Blasted	Sand Blasted	Sand Blasted
Weight	kg	13	36	42	122	140	260
Drain in high point	-	Yes	Yes	Yes	Yes	Yes	Yes
Drain in low point	-	Yes	Yes	Yes	Yes	Yes	Yes
Sampling valves	-	Option	Upstream downstream	Upstream downstream	Upstream downstream	Upstream downstream	Upstream downstream
Inlet/Outlet chimical cleaning	-	Option	Upstream downstream	Upstream downstream	Upstream downstream	Upstream downstream	Upstream downstream
Max Service Pressure	bar	10	10	10	10	10	10
Standard mounting	-	Horizontal Vertical	Horizontal Vertical	Horizontal Vertical	Horizontal	Horizontal	Horizontal
CABINET							
Material	-	PC	PC	PC	Painted steel	Painted steel	Painted steel
Cabinet/Reactor cable lenght	m	10	10	10	10	10	10
Weight	kg	8	8	30	35	40	68
Cabinet ventilating	-	Yes	Yes	Yes	Yes	Yes	Yes
Power supply	V	220-240	220-240	220-240	220-240	220-240	380-415
Frequency	Hz	50/60	50/60	50/60	50/60	50/60	50/60
Amperage	A	0.61-0.56	1.22-1.12	2.34-2.15	5.98-5.48	13.37-12.26	10.51-9.63
Cable Type/Gauge	mm²	3G1,5	3G1,5	3G1,5	3G2,5	3G6	5G2,5
Power	W	133	267	505	1263	2660	5319
Differential protection	-	No	No	30mA	30 mA	30 mA	30 mA
Protection	A	Fuse 4A	Fuse 4A	10	16	25	16
Ingress Protection	-	IP54	IP54	IP54	IP54	IP54	IP54
UV LAMPS							
Number of lamps	-	1	2	4	3	5	10
Power unitary	W	120	120	120	400	500	500
Type of lamp	-	Amalgam	Amalgam	Amalgam	Amalgam	Amalgam	Amalgam
UV Power unitary	W	37	37	37	150	165	165
Total UV Power	W	37	74	148	450	825	1650
Lifetime	h	16 000	16 000	16 000	16 000	16 000	16 000

C. MONITORING

Designation	
Interface	Millenium III
Voltage indicator	White indicator of voltage presence in the control cabinet (no indicator for units 120W).
Lamp indicator	Green LED indicating that all lamps are in operation.
Main alarm indicator	Red LED indicating a device fault.
ON/OFF Switch	Switch to turn the unit on and off.
Remote (ON/OFF lamps)	Allows remote control of the device with a potential free switch.
Screens	Radiation UVC in W / m², Reactor temperature in ° C (Optional), System hour meter, System start counter, Power regulation level, System status (On-Off, Pre-alarm, Alarm)
Önorm UV sensor with measurement window	Reads the UVC radiation of the device.
4-20mA Output UV irradiance	4-20mA output signal copying the UV sensor, 0 W / m² = 4mA, Sensor Caliber = 20mA
Main-alarm dry contact	Potential-free alarm contact combining the UV alarm and overheating reactor (Option). The contact opens when the UV level is too low or the reactor overheats (Option).
Pre-alarm dry contact UV irradiance	Pre-alarm UV contact free of potential. The contact opens in case of low UV level.
Lamp alarm dry contact	Contact defect lamp (s) free of potential. The contact opens when the lamp is stopped during operation.
Pump dry contact	Contact allowing the circulation of water when the necessary UV dose is reached.
Data outputs contact	150Vdc, 250Vac, 5A
DIMMING MODES (Option)	
Auto regulation on UV (Option)	Adapts the power of the lamps according to the UV radiation read by the sensor (except DW1150 120W).
Auto Flow/UV Dimming (Option)	Adapts the power of the lamps according to the UV radiation read by the sensor correlate to the flow rate given by the flow meter of the customer (except models DW1150 120W).

D. POSSIBLE OPTIONS

Designation	DW1150 120W	DW2150 120W	DW4205 120W	DW3323 400W	DW5355 500W	DW10508 500W
Temperature sensor	OPT006202	OPT006202	OPT006202	OPT006202	OPT006202	OPT006202
Inlet/Outlet chimical cleaning	OPT014970	serial	serial	serial	serial	serial
Sampling valves	OPT002079	Serial	Serial	Serial	Serial	Serial
Power dimming	not available	OPT014619	OPT014619	OPT014619	OPT014619	OPT014619
PN16	OPT014971	OPT014971	OPT014972	OPT008863	OPT008863	OPT008863

E. CLEANING SYSTEM OF QUARTZ SLEEVES

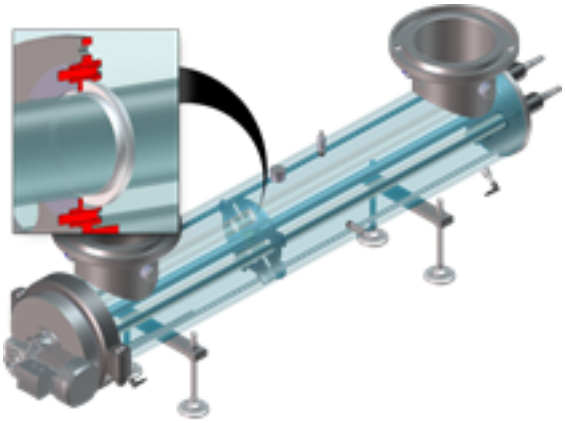

CLEANING WITH SCRAPER

Auto with motor:

The automatic cleaning system is designed to reduce the formation of organic and inorganic deposits on quartz sleeves.

It uses reinforced Teflon rings mounted on a stainless steel trolley to scrape the surface of the quartz sleeves of each lamp.

The automatic system ensures the cleaning at predetermined and configurable intervals by means of a trapezoidal screw driven by an electric motor by performing a round trip all along the quartz sleeves.

Unlike chemical cleaning, scraping operations that do not require lamp shutdown and hydraulic isolation of the UV reactor are carried out during operation of the UV device.

Benefits:

The cleaning system minimizes the fouling of the quartz sleeves.

Provides a constant UV dose.

Operates in line while lamps perform disinfection, thus reducing downtime.

Can be set to clean lamp sleeves at adjustable intervals of one hour (Auto only).

Manual cleanings with chemical cleaning agents previously frequent become exceptional.